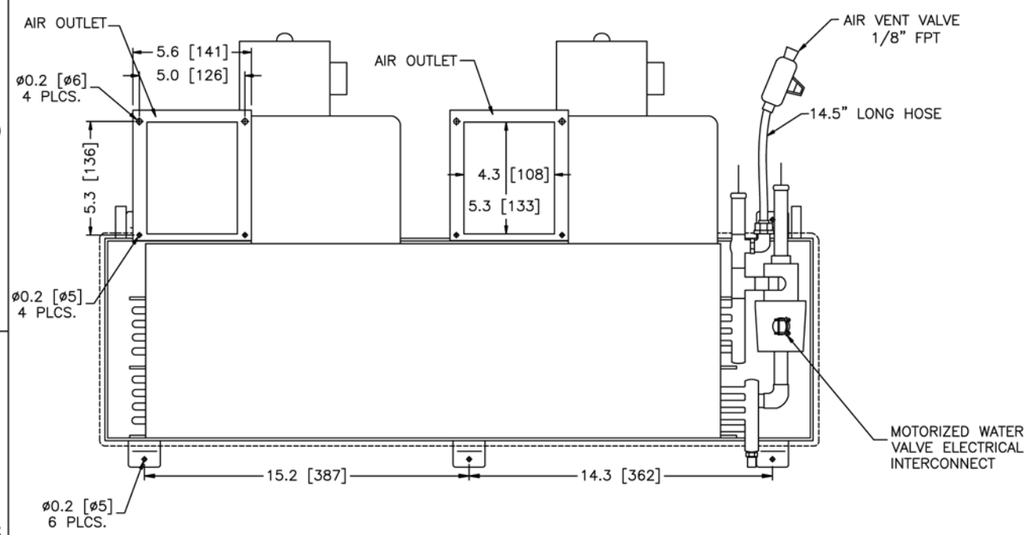

TOP VIEW

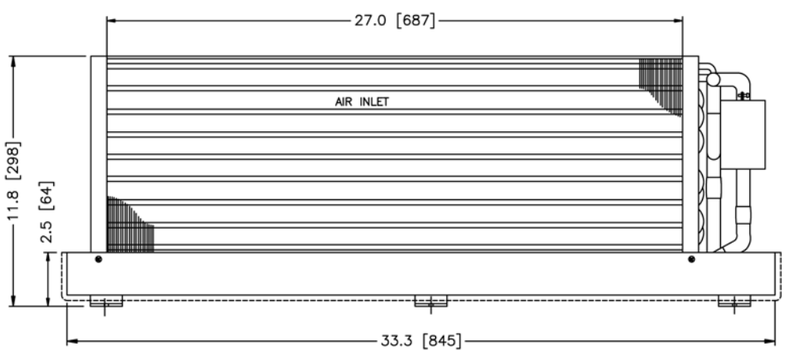

FRONT VIEW

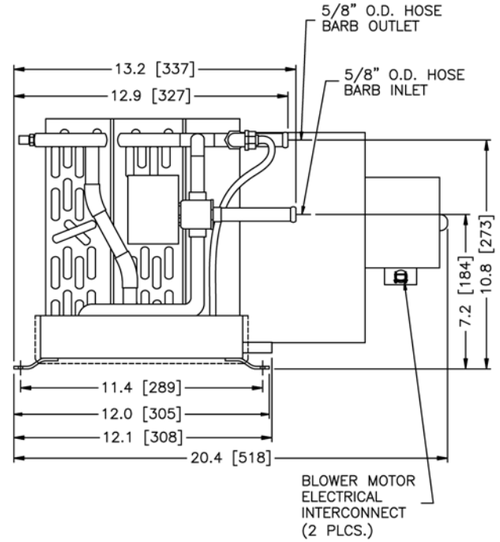

SIDE VIEW

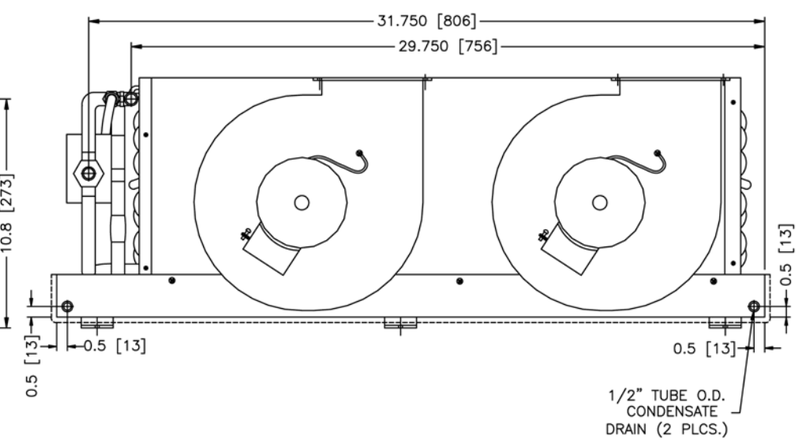

BACK VIEW

WEIGHT: 60 LBS. (31.3 KG.)

SYMBOL	DATE	DESCRIPTION	BY	CHECKED

REVISIONS

TOLERANCES UNLESS OTHERWISE SPECIFIED
X.X: ±.125
ANGULAR: ±1.0

CAD
REVISE ON CAD ONLY

THIRD ANGLE PROJECTION

TECHNICOLD by NORTHERN LIGHTS

1419 W. Newport Center Drive
Deerfield Beach, FL 33442
(954) 421-1717
www.technicold.com

DRAWN: LB
CHECKED:
SCALE: 1:5
RELEASED: 5/12/09
SHEETS: OF 1
UNITS OF MEASURE: INCHES (MM)

TITLE: FRESH AIR MAKE-UP UNIT

MA1000B

DWG. NO.: C-6669

REV.: –